DESIGNER

HANDBOOK

STAINLESS STEEL FABRICATION

TABLE OF CONTENTS

General.....1
Characteristics of Stainless Steel.....2
Fabrication Properties.....2
Cutting.....2
Mechanical.....3
Shearing.....3
Circle Shearing.....4
Sawing.....4
Blanking, Punching, and Nibbling.....5
Abrasive Cutting.....6
Thermal.....6
Flux Cutting.....6
Arc Cutting.....7
Plasma Arc Cutting.....7
Bending.....8
Springback.....8
Types.....9
Press Brakes.....9
Roll Bending.....9
Roll Forming.....9
Stretch Forming.....10
Descaling.....10
Removal of Oxide Scale.....10
Pickling Solutions.....10
Blasting.....10
Removal of Weld Discoloration.....10
Passivation.....10
Finishing.....11
Grinding, Polishing & Buffing.....11
Care in the Shop.....11
Handling.....11
Contamination.....12
Cleaning.....12
Rust Contamination.....12
Cleaning Methods.....12

GENERAL

Stainless steel is not a single alloy, but rather the name applies to a group of iron based alloys containing a minimum of 10.5% chromium. Other elements are added and the chromium content increased to improve the corrosion resistance, improve heat resisting properties, enhance mechanical properties, and/or to improve fabricating characteristics. There are over 50 stainless steel grades that were originally recognized by the American Iron and Steel Institute (AISI) and are detailed in a designer handbook, *Design Guidelines for the Selection and Use of Stainless Steel*, available from the Specialty Steel Industry of North America (SSINA).

This booklet on the fabrication of stainless steel will only deal with 30 of the more common grades in three metallurgical groups: austenitic, ferritic, and martensitic.

AUSTENITIC GROUP

This group contains chromium and nickel and is identified by the Type 300 series. Grades containing chromium, nickel, and manganese are Type 200. These two types have different compositions and properties, but many common characteristics. They can be hardened by cold working, but not by heat treatment. In the annealed condition, all are essentially nonmagnetic. They have excellent corrosion resistance and unusually good formability. Type 304 (18% chromium - 8% nickel) and Type 316 (16% chromium - 10% nickel - 2% molybdenum) are the most widely used grades in this group.

FERRITIC GROUP

The ferritic stainless steels are identified by the Type 400 series. They cannot be hardened by heat treatment. They are straight chromium alloys and only moderately hardened by cold working. This group is magnetic and has good ductility and resistance to corrosion. Type 430 (16% chromium) is the general purpose stainless steel of the ferritic group.

MARTENSITIC GROUP

This group is also identified by the Type 400 series and are hardenable by heat treatment. They are magnetic and resist corrosion in mild environments. The ductility of this group is fair to good. Type 410 (11.5% chromium) is the most widely used alloy of this group.

Exhibit 1
RELATIVE FABRICATION CHARACTERISTICS OF STAINLESS STEELS

Group	Austenitic					Ferritic		Martensitic		
Type Number	201, 202, 301, 302, 304, 304L 305	303*	309S 310S	316 316L 317 317LMN	321 347	430 439	405 442 446	403 410	420	440A 440C
Air Hardening	No	No	No	No	No	No	No	Yes	Yes	Yes
Blanking	F	F	F	F	F	E	E	E	E	G
Brazing, Silver	G	–	G	G	G	G	G	G	G	G
Buffing	G	–	G	G	G	G	G	G	G	G
Drawing, Deep	E	–	G	E	G	E	F	E	NR	NR
Forming, Hot	G	F	G	G	G	G	G	G	G	G
Forming, Cold	G	F	G	G	G	G	F	G	F	NR
Grinding, Ease of	F	G	F	F	F	F	F	G	E	E
Grinding (magnetic)	No	No	No	No	No	Yes	Yes	Yes	Yes	Yes
Hardenable by Heat Treatment	No	No	No	No	No	No	No	Yes	Yes	Yes
Punching (perforating)	F	–	F	F	F	G	G	G	G	G
Polishing	G	G	G	G	F	G	G	G	G	G
Riveting, Hot	G	F	G	G	G	G	G	G	NR	NR
Riveting, Cold	G	F	G	G	G	G	G	G	NR	NR
Shearing, Cold	F	F	F	F	F	G	G	G	G	F
Soldering	G	G	G	G	G	G	G	G	G	G
Brazing	G	G	G	G	G	G	G	G	G	G
Spinning	G	–	G	G	G	G	F	F	NR	NR
Welding	E	NR	E	E	E	F	F	F	F	F
Machining	F	E	F	F	F	G	F	G	F	NR

Code: E = Excellent G = Good F = Fair NR = Not generally recommended (Poor)

*Chemistry designed for improved machining (as are other grades, i.e., 416, 420F, 430F, 440F)

CHARACTERISTICS OF STAINLESS STEEL

Stainless steels can be fabricated by methods similar to those used for carbon steels and other common metals. However, changes may be necessary to the extent that they differ in yield strength and rate of work hardening. All have work hardening rates higher than common carbon steels, but the austenitics are characterized by large increases in strength and hardness with cold work. With the exception of the resulfurized "free-machining" grades (Type 303 is the common type, but many others can be treated to be more easily machined), all stainless steels are suitable for crimping or flattening operations. The free machining grades will withstand mild longitudinal deformation, but may exhibit some tendency to splitting. In spite of their higher hardness, most martensitic and all of the ferritic types can be successfully fabricated. Exhibit 1 shows the relative fabrication characteristics of three groups of stainless steel.

FABRICATION PROPERTIES OF STAINLESS STEEL

Exhibit 2 lists the 30 grades and their UNS number (the Unified Numbering System was developed by the American Society for Testing Materials and the Society of Automotive Engineers for all commercial metals and alloys). Some stainless types are not suitable for certain applications and others are designed to be better adapted. Exhibit 2 shows the suitability of these 30 types in various fabrication applications.

CUTTING

Important Note: In all cutting operations on stainless steels the following guidelines are helpful in maintaining corrosion resistance:

- No contamination by ferrous (iron or steel) material or particles should take place.
- Mechanically cut edges will naturally form the corrosion resistant passive film. The formation of such a passive film on cut edges will be enhanced by a chemical (acid) passivation treatment with nitric acid.
- Thermally cut edges may be affected in terms of chemical composition and metallurgical structure. Removal of affected surface layers by dressing is necessary so that impaired areas of mechanical and corrosion resistant properties are minimized.

Cutting operations are usually necessary to obtain the desired blank shape or size prior to forming operations and also to trim a part to final size. Mechanical cutting and thermal cutting are the two most frequently used cutting operations and the specific methods available are discussed in the individual sections below. These methods are useable with stainless steel, but because of the differences in strength, toughness and rate of work hardening, certain details in the operations may need to be modified relative to carbon steels.

MECHANICAL
Shearing

The shear strength of annealed austenitic stainless steel is about 65 to 70 percent of its ultimate tensile strength. The shear strength of carbon steel is in the range of 55 to 60 percent of its ultimate strength. Generally, shears are rated on their capacity to shear mild carbon steel of 50 ksi tensile strength. The shears are supplied with rake on the upper knife in accordance with the shear manufacturer's specification. More force and heavier equipment will be required to shear equal thicknesses of the stainless alloys. With more power required it is necessary to derate the shears against their nominal capacity, which is usually given in terms of the thickness of low carbon (mild) steel which they are capable of shearing.

Typical relative derated capacities are as follows:

Low Carbon (mild) steel
0.4 in. (10 mm) thick material
Ferritic Stainless Steel (T430)
0.3 in. (7-8 mm) thick material
Austenitic Material (T304)
0.2 in. (5-6 mm) thick material

Note: Because thinner gauges of stainless steel are generally used, the force required to shear stainless steel for a given part is often comparable to the force needed to shear a similar part made of thicker carbon steel.

Ferritic stainless steels tend to fracture after being cut through approximately half their thickness. In this respect they are similar to carbon and low alloy steels.

Austenitic stainless steels are characterized by a high ductility and, hence, a greater resistance to fracture. A greater degree of penetration takes place before the fracture occurs. The clearance setting of the blades is, therefore, important. For shearing thin gauge sheet a clearance of 0.001 to 0.002 in. (0.03 to 0.05 mm) is suggested.

Closer clearance tends to increase blade wear, whereas larger clearances allow the material being sheared to drag over to an excessive degree, resulting in excessive wear of the blades and a poor cut. As the material thickness increases the clearance should be increased accordingly and adjusted to best suit the specific piece of equipment being used, consistent with minimum roll over, burr height and distortion (camber, twist, and bow).

The clearance between the shear knives should be sufficient to avoid secondary shearing by the upper knife as it passes through the cut. Insufficient clearance exists if the cross section of the sheared edge is smeared from top to bottom. Proper clearance is present if about 40 percent of the metal thickness is burnished at the top side of the table piece and at the bottom side of the drop-

Exhibit 2
FABRICATION PROPERTIES OF STAINLESS STEEL

Group	Type No.	UNS No.	Machinability	Adaptable for hot forging	Readily formable by bending	Readily joinable by fusion welding	Readily shaped by deep drawing (cold)	Readily joinable by resistance welding	Readily joinable by soldering and brazing	Physical and mechanical properties satisfactory for spinning	Readily heat-treatable for hardening and for mechanical properties
Austenitic	201	S20100	X	X	X	X	X	X	X	X	–
	202	S20200	X	X	X	X	X	X	X	X	–
	301	S30100	X	X	X	X	X	X	X	X	–
	302	S30200	X	X	X	X	X	X	X	X	–
	303	S30300	XX	X	–	–	–	–	X	–	–
	304	S30400	X	X	X	X	X	X	X	X	–
	304L	S30403	X	X	X	X	X	X	X	X	–
	305	S30500	X	X	X	X	X	X	X	XX	–
	309S	S30908	X	X	X	X	X	X	X	X	–
	310S	S31008	X	X	X	X	X	X	X	X	–
	316	S31600	X	X	X	X	X	X	X	X	–
	316L	S31603	X	X	X	X	X	X	X	X	–
	317	S31700	X	X	X	X	X	X	X	X	–
	317LMN	S31726	X	X	X	X	X	X	X	X	–
	321	S32100	X	X	X	X	X	X	X	X	–
	347	S34700	X	X	X	X	X	X	X	X	–
Ferritic	405	S40500	X	X	X	X	X	X	X	X	–
	430	S43000	X	X	X	X	X	X	X	X	–
	439	S43035	X	X	X	X	X	X	X	X	–
	430F	S43020	XX	X	–	–	–	–	X	–	–
	442	S44200	X	X	X	–	–	–	X	–	–
	446	S44600	X	X	X	X	–	–	X	X	–
Martensitic	403	S40300	X	X	X	X	–	X	X	–	X
	410	S41000	X	X	X	X	X	X	X	X	X
	416	S41600	XX	X	–	–	–	–	X	–	X
	420	S42000	X	X	–	–	–	–	X	–	X
	420F	S42020	XX	X	–	–	–	–	X	–	X
	440A	S44002	X	X	–	–	–	–	X	–	X
	440C	S44004	X	X	–	–	–	–	X	–	X
	440F	S44020	XX	X	–	–	–	–	X	–	X

X = Suitable for application. XX = Better adapted for application.

off piece. Although clearances have been found to vary from shop to shop according to specific requirements, a good guide is to use a clearance of about 5 percent of metal thickness for stock 0.062 in. (1.6 mm) thick and heavier, and 3 percent of the metal thickness for stock below 0.062 in. (1.6 mm) thick. Experience has shown that hard material will tolerate somewhat larger clearance than soft material. Dull tools increase shearing pressure, create the effect of too small a clearance, and produce burrs on sheared edges.

To counteract the shearing force required, the hold down pressure on the clamps may have to be increased, particularly when shearing the austenitic grades.

Figure 1 shows the typical shearing parameters and mechanical setup.

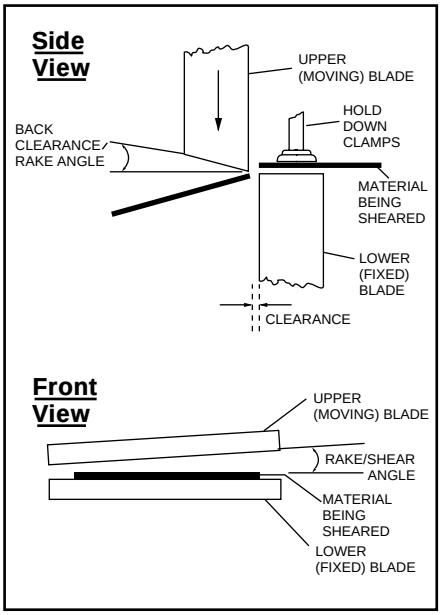

Figure 1: Schematically shows the shearing parameters and mechanical setup.

The higher power requirements can to some extent be countered by altering the rake/shear angle. A rake of 1 in 40 is a shear angle of approximately 1½°. This is the suggested least rake which should be used. Small rake/shear angles necessitate higher power/force, but cause less distortion, whereas larger rakes/shear angles (e.g., 1 in 16 or 3½°) reduce the power/force required, but need higher hold down pressure on the clamps and tend to increase distortion.

Blades MUST BE SHARP. Dull blades increase the roll over, burr height and distortion (clamp, twist, and bow).

The moving blade should be provided with as large as possible back clearance/rake angle, without causing chipping of this blade.

For anything but the shortest of production runs, blades should be made from high quality tool steels, quenched and tempered to possess the correct combination of hardness, strength and toughness.

Recommendations of the type of steel for shear knives should come from blade or knife manufacturers. However, suggestions on the AISI type steels for knives are: Type D-2 of 60 Rc hardness for long runs on light gauge material; Type A-2 of 60 Rc for intermediate runs and intermediate gauges and Type S-1 of 57 Rc for heavy duty shearing.

Lubricants are generally not necessary when shearing stainless steel, but the periodic application of soap or kerosene with a swab have been found helpful in reducing metal pickup on the cutting edges when the shear is in constant use.

Some benefits may be obtained by a slight reduction of shearing speed (20-25%), but this may increase the distortion of the cut piece.

Distortion (twist, camber, and bow) tends to increase as the width of the cut piece decreases relative to the thickness of the material, and also to a lesser degree as the length of the cut increases. Distortion may be minimized by careful attention to, and adjustment of, the various parameters as discussed above. If these steps do not eliminate distortion, stretching the cut piece by approximately 3-5% usually rectifies the situation.

The work hardening effect of shearing is significant in the case of austenitic stainless steels. Subsequent forming (bending) may lead to the initiation of a crack from the sheared edge. This can be overcome by mechanical dressing of the sheared face to remove the work hardened surface layers, or by annealing the cut pieces.

Circle Shearing

It is important to set circular knives to correct horizontal and vertical clearance to attain clean cutting and acceptable knife life. Optimum horizontal knife clearance usually varies from one setup to another. A good guide from which to start is a clearance equal to 8 percent of the thickness of the stock. Usually less vertical clearance in relation to the stock thickness is required for hard material than for soft material. A minimum of overlapping (vertical positive clearance) of the knives is desirable to attain burr-free edges. Knives are generally overlapped to cut all the way through the metal up to about 0.045 in. (1.1 mm) thick. For heavier gauge metal, the knives are separated (vertical negative clearance) to attain a clean cut and break action on the sheared edge.

Knife speed for circular shearing is on the order of 60 to 150 surface feet per minute (18 to 45 surface meters per minute) depending on the thickness of metal cut. For material below 17 gauge, 0.058 in. (1.5 mm), the knives are operated at the maximum referenced speed and at lower speeds for heavier gauge material. Knives should be smoothly ground to keen cutting edges. Knives deteriorate with metal pickup. This is minimized by using a lubricant such as heavy duty water soluble oil or petroleum base oil to which 15 to 20 percent of kerosene is added.

Here again recommendations on shear knives should come from their manufacturers. Suggestions on AISI type steels for knives are: Types D-3 and M-2 hardened to 62 to 65 Rc for thin gauges to .030 inch; Type D-2 for intermediate gauges .030 to 0.100 inch, and Type S-5 for heavier gauges.

Sawing

Stainless steels can be cut with mechanized or hand operated hack saws. High speed steel blades are recommended for all types of sawing. The sawing of austenitic grades (300 series) is made more difficult due to their tendency to work harden. When cutting these grades the cut must be initiated without any riding of the saw on the work, a positive feed pressure must be maintained, and no pressure, drag or slip should occur on the return stroke. An emulsion of soluble oil should be used as a cutting fluid.

Hand Hacksawing. Generally used for random cutting of light gauge material, small diameter bar, tube and pipe. A blade with a wavy set is preferable. Wave set tooth blades of 32 teeth per inch (25 mm) mounted in a rigid frame to prevent bending are preferred for material up to 16 gauge, 0.062 in. (1.6 mm). Wave or raker set teeth of 24 teeth per inch (25 mm) are satisfactory for material 1/16 to ¼ in. (1.6 to 6 mm) thick. Heavier gauges require coarser teeth to facilitate removal of cuttings and to prevent clogging. Regardless of the section thickness, it is desirable to have at least two teeth constantly in contact with the work to attain smooth cutting.

Cutting should be accomplished with long smooth strokes with light but constant pressure at a rate of about 30 to 50 strokes per minute. On the back stroke the blade should be lifted clear of the surface to avoid riding over and work hardening the surface and to maintain

sharpness of the teeth particularly when sawing austenitic stainless steels. For light gauge material, where bending may be a problem, backing up the material with wood has been found helpful.

Power Hacksawing. Cutting fluid should be flooded on the cut to maximize cooling, particularly in cutting the austenitic grades. More than one tooth should be in contact with the work at all times. Therefore small pitched blades should be used for cutting thinner gauges and small diameters. As the material thickness or diameter increases the tooth spacing should increase to give better clearance and to minimize chip packing:

up to $^1/_4$ in. (6 mm) thick/diameter
10 teeth per inch (25 mm)
$^1/_4$ - $^3/_4$ in. (6-20 mm) thick/diameter
10/8 teeth per inch (25 mm)
$^3/_4$ - 2 in. (20-50 mm) thick/diameter
6 teeth per inch (25 mm)
over 2 in. (50 mm) thick/diameter
4 teeth per inch (25 mm)

Band Sawing. Band sawing can be used for contour cutting, the sawing of tubes, pipes and medium to large diameter bars. Adequate cutting fluid should be fed to the cut, especially in the cutting of thick material — a minimum of 30 drops per minute, increased for thicker material. As in power hacksawing, fine pitched blades are used for cutting thin material, the tooth spacing being increased as the material being cut increases in thickness.

up to $^1/_{16}$ in. (2 mm) thick/diameter
32 teeth per inch (25 mm)
over $^1/_{16}$ - $^1/_4$ in. (2 mm - 6 mm) thick/diameter
24/14 teeth per inch (25 mm)
over $^1/_4$ - $^3/_4$ in. (6 mm - 20 mm) thick/diameter
10 teeth per inch (25 mm)
over $^3/_4$ - $1^3/_8$ in. (20 mm - 35 mm) thick/diameter
8 teeth per inch (25 mm)
over $1^3/_8$ - 2 in. (35 mm - 50 mm) thick/diameter
6 teeth per inch (25 mm)
over 2 in. (50 mm) thick/diameter
4/3 teeth per inch (25 mm)

Blanking, Punching, and Nibbling

Blanking. Blanking stainless steels requires more force than for equal thicknesses of carbon steel because of the higher shear strength of stainless steel. Part of the reason that greater force is needed is that the blanking cut must be carried further through the thickness of austenitic stainless steel than is necessary with carbon steel, before final breaking occurs. Thus the punch should also travel through the metal.

Blanking, punching, and piercing operations can be carried out without lubrication. However, the use of a lubricant reduces the power required and also improves the tool life. Lubricants which may be used are emulsifiable chlorinated waxes/oils, wax based pastes, soluble oils, or soap plus borax.

Clearance between the punch and the die is important. For the thinnest gauges of material a minimum clearance of 0.001 in. (0.025 mm) per side is suggested. For thicker sheet the clearance per side should be between 5-10% of material thickness, and for plate thicknesses the clearance per side may be increased to 15% of the material thickness.

Clearances are best determined by experience and depend on the specific piece of equipment employed, the complexity of the job, and the material.

Close clearances require very careful alignment of the tools and tend to increase the wear on the tooling. Larger clearance are preferred consistent with preventing the metal being drawn into the die and minimum burr formation (particularly austenitic stainless steels). Larger clearances should be used when working temper rolled austenitic material.

To reduce the shearing force in blanking austenitic stainless steel parts, one of the cutting tools is often provided with angular shearing edges, Figure 2. If the blanked portion is to become the part, the angular shear edges should be on the die and the punch should be flat to avoid distortion of the work piece. Conversely, if the blanked portion is the discard, the angular shear edges should be on the punch to maintain flatness in the remaining part.

Tooling should be clean and free of any surface imperfections which otherwise tend to pick up material, scoring the punch and dies, and possibly causing jamming and breaking of the punches.

Blanking and punching are severe applications involving both shock and abrasion. A range of tool steels may be used, depending on the aspects of the particular job, and the production quantity required. Proper heat treatment by quenching and tempering must be employed to develop the necessary combination of properties, i.e., hardness, wear resistance and toughness.

Cutting Speeds and Feeds	Strokes/minute	Feed/Stroke
Wrought Ferritic Stainless Steels	90	0.006 in. (0.15 mm)
Wrought Martensitic Stainless Steels (Harder)	75	0.006 in. (0.15 mrn)
Wrought Martensitic Stainless Steels (Softer)	100	0.006 in. (0.15 mm)
Wrought Austenitic Stainless Steels	80	0.006 in. (0.15 rnm)
Cast Austenitic Stainless Steels	65	0.006 in. (0.15 mm)

All steels are assumed to be in the annealed (softened) condition

Cutting speeds in surface feet and (meters) per second			
For thicknesses of	$^1/_4$ - $^1/_2$ in. (6-12 mm)	1- 3 in. (25-75 mm)	4 -12 in. (100-300 mm)
Austenitic Type 304	2.3 (0.71)	1.7 (0.51)	1.2 (0.36)
Austenitic Type 316 (*)	1.7 (0.51)	1.0 (0.30)	0.7 (0.20)
Austenitic Type 321	2.3 (0.71)	1.7 (0.51)	1.2 (0.36)
Austenitic Type 309/310 (*)	1.8 (0.56)	1.3 (0.41)	0.8 (0.25)
Ferritic Type 430	2.3 (0.71)	1.5 (0.46)	1.2 (0.36)
Martensitic Type 410/420	2.8 (0.86)	1.9 (0.58)	1.4 (0.43)

All steels in the annealed (softened) condition

Note: • The thinner the material, the higher the cutting speed.

- Up to about 4 in. (100 mm) thick/diameter a regular tooth shape should be employed. For thicker material a hook shaped tooth has advantages.
- Feed Pressure. For thin material the feed pressure should be a minimum, for medium thickness average pressure, and for thick material the feed pressure should be at a maximum for all materials. The steels indicated (*) require higher feed pressure.

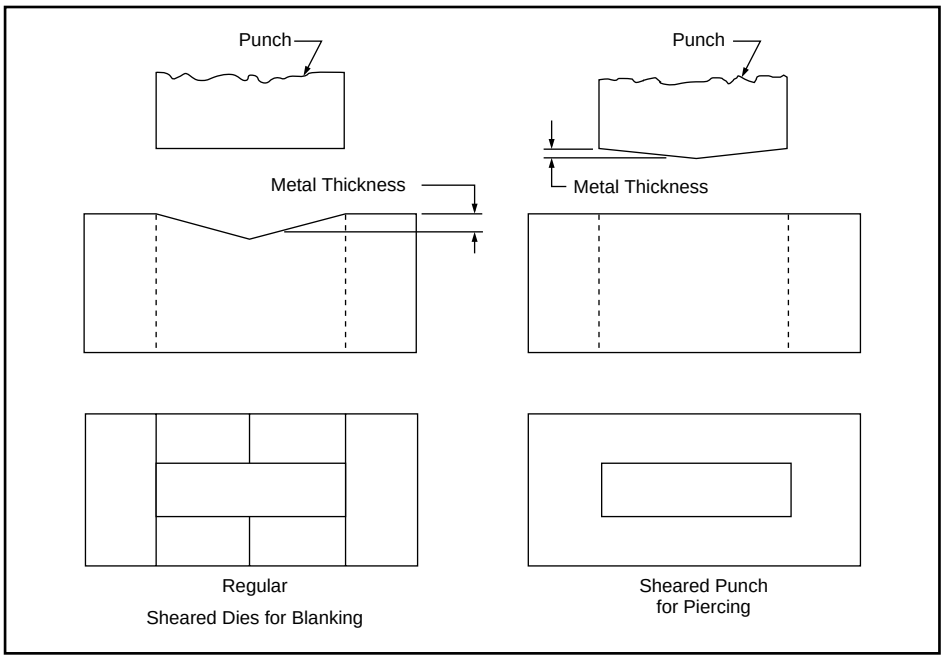

Figure 2: Face-sheared tools.

Punching. Punching has much in common with blanking, except that the holes are smaller and the punched out metal is usually discarded. Thus the angular shear edges are placed on the punch. The punched holes may be pierced separately or by multiple punching.

In the austenitic stainless steels, circular holes should have a minimum diameter of at least twice the thickness of the metal and the minimum distance between adjacent holes should be $^1/_2$ the hole diameter.

Lubrication should be used to minimize metal pickup on the tooling and cool the work piece and the tools. In the absence of previous experience, it is recommended that lubricant suppliers be consulted as to the proper mixture of coolant and lubricant. However, in most instances, lubricants which have been proved satisfactory for blanking, have been satisfactory for punching operations. If annealed austenitic stainless steel tends to distort during punching because the holes are too closely spaced, the tendency for distortion may be prevented by the use of slightly cold worked material, such as the $^1/_4$ hard temper rolled, and by the use of flat faced tools and reduced clearance between punch and die.

Nibbling. Nibbling is a process of cutting by blanking out a series of overlapping holes and is ideally suited for irregular shapes. This process is widely used for parts where quantities do not justify the expense of blanking dies. The holes can be of varied shape — circular, triangular, or rectangular with rounded corners. The smoothness of the edge is governed by the shape of the tooling and the overlap of successive cuts. Since more force is necessary to cut stainless steel than carbon steel, the capacity of nibbling machines is about four gauges less for austenitic stainless steels than for carbon steel. Usually the tools are flat faced and should contain no irregular shear edges. If problems are experienced in cutting a thickness, which should be possible, or if an unacceptable cut is produced, attention should be given to parameters which include stroke rate, feed rate and clearance. Machines equipped with mechanical feed devices and variable stroke rates are recommended. The cutting edges of the tooling MUST BE SHARP. The importance of this aspect cannot be over emphasized.

High speed steel or high carbon-high chromium alloy die steels hardened to a Rc hardness of 60 to 62 are satisfactory materials for blanking, punching, and nibbling. High speed steels are preferred for nibbling. Cemented carbide punches and dies, well supported and properly aligned, are satisfactory for blanking and punching, but before proceeding with the use of carbide tools, it is recommended that the tool supplier be consulted to obtain a recommendation on how to best use the carbide tools.

Abrasive Cutting

Abrasive wheels, rotating at high speeds, can be used for both cut-off operations on relatively small section sizes, and for straight line cutting of sheet and thin plate material.*The cutting of large radius curves is also possible.

Abrasive cutting is a useful method for cutting thinner cross sections to length (or to a mitre), and for making cuts of limited length on the shop floor during fabrication.

***Note:** Straight line cutting of thick plate (from $^3/_4$ - 4 in./20 - 100 mm thick) can be accomplished by abrasive cutting. This necessitates the use of specialized equipment.

Cut-off operations are normally done wet, using a soluble oil emulsion. Rubber-based discs are used.

Random straight line cutting of sheet and thin plate is normally done dry. Vitrified or resinoid-bonded discs are used. Care must be exercised not to induce excessive over-heating of the cut edge.

Dedicated discs (i.e., uncontaminated by cutting of other material) must be used.

Random cutting done by hand must employ safety measures, as the discs can jam and break in the cut groove.

THERMAL

In conventional oxy-cutting the metal is first heated by the flame, then an excess of oxygen is supplied. This causes exothermic (heat generating) reactions which generate the heat necessary to melt the oxides formed, which are then removed from the cut by the velocity of the gas jet.

Stainless steel having a high level of chromium (Cr) cannot be cut by simple oxy-cutting methods due to the very high melting point of the chrome oxide which is formed. Modified or other methods, therefore, have to be employed.

Flux Cutting or Metal Powder Cutting

A fine iron-rich metal powder is sprayed into the oxy-acetylene gas flame. When this burns in the oxygen stream, a great amount of heat is generated, sufficient to melt the refractory chrome oxide, and in addition, a diluting effect also takes place. The molten material is removed from the cut by the velocity of the gas stream enabling cutting to proceed.

This process is adaptable from thin to very thick material, with cutting speeds only slightly less than those for equal thicknesses of carbon steel. Therefore, it is particularly suitable for the cutting of thick plates and slabs, and the removal of feeders and risers from castings.

The cut edge is both chemically and metallurgically affected causing alteration of chemical composition, and possible precipitation of carbides (sensitization) in the austenitic grades. Prior to welding, 0.10 - 0.12 in. (2.5 - 3 mm) of material should be removed from the cut edge to ensure the corrosion resistant properties are retained. Cut edges not welded must also be dressed prior to service.

The process is amendable to automatic set-up on profile cutting equipment. Stack-cutting is also possible.

A variation on iron powder cutting is the injection of finely pulverized flux into the cutting oxygen stream. This flux reacts with the refractory chrome oxide to form a slag of lower melting point compounds, which is then removed from the cut by the gas stream velocity. This method is sometimes preferred because it produces a smoother cut. However, it is not as versatile as powder cutting, the edge must also be dressed to a depth of 0.08 in. (2 mm) and operators must be protected from the toxic fumes which are produced.

Arc Cutting

The extremely high temperatures developed in Electric-Arc processes will melt all metals, thus enabling them to be cut.

Many modifications of the process exist. Different electrodes can be used, with or without gases either to promote or prevent the oxidation of the metal being cut. The two commonly used processes are **Air Carbon-Arc Cutting** and **Oxygen Arc-Cutting.**

- **Air Carbon-Arc Cutting.** A carbon graphite electrode is used and a stream of high velocity compressed air flowing parallel to the electrode strikes the molten metal behind the arc thus removing it from the cut.

  As the thickness of the material being cut increases, so does the electrode diameter and the current required. For cutting stainless steels direct current is preferred, and the power source must have sufficient capacity (e.g., 1/4 in. [6 mm] electrode needs 150-350 amps, 1/2 in. [12 mm] electrode needs 400-800 amps).

  For thorough-cutting, the electrode is held almost vertical. More than one cutting pass may be necessary for cutting material over 1/2 in. (12 mm) thick.

  Edges which are to be welded must be dressed to a depth of 0.08 - 0.10 in. (2 -2.5 mm).

  Carbon-Arc Cutting is a modification which does not make use of the compressed air. The molten metal is removed from the cut by gravity, by the force of the arc, or both. Provided the recommended settings are followed, acceptable cuts can be produced in the thicker sheet gauges and thin plate.

- **Oxygen-Arc Cutting.** Flux-covered tubular electrodes are used with the oxygen supplied down the tube. The electric arc initiates melting and the flux covering on the electrode acts to form lower melting point oxides which are removed from the cut by the gas stream.

  Direct current electrode negative gives the most rapid cut. The speed of cut varies with the thickness and composition of the metal being cut, the oxygen pressure, the amount of current and the dimensions of the electrode.

  The cut surfaces are rough and uneven.

  Shielded Metal-Arc Cutting is a modification using a heavily flux coated stick electrode. The flux performs the same function as described previously, and the molten metal is removed from the cut by gravity, the force of the arc, or both.

  Standard welding equipment can be used for cutting thicker sheet gauges and thinner plate.

  The cut edge must be dressed prior to welding or being placed in service.

Plasma Arc Cutting

Plasma forming gases are constricted and passed through an arc chamber, the arc supplying a large amount of electrical energy. This ionizes the gases and they exist as a plasma, a mixture of free electrons, positively charged ions and neutral atoms. Extremely high temperatures are attainable up to 55,000°F (30,000°C). Therefore, cutting results from the high temperature and not a chemical reaction. The constricted plasma arc heats and melts the metal in the cut and the molten products are removed by the gas jet.

Plasma Arc Cutting with the Transferred Arc is schematically illustrated in Figure 3. The tungsten electrode is the cathode (connected negative terminal), and the metal being cut is the anode (connected positive terminal).

- **The Plasma Gases.** Many gases can be used in a plasma-arc torch, provided they do not have an adverse effect on the tungsten cathode or the metal being cut. The efficiency of the gas in terms of the thickness and the speed of cut depends on its thermal conductivity as a plasma at the high temperatures.

  The traditional gases used for the cutting of stainless steels are the gases argon (A), nitrogen (N), hydrogen (H), and helium (He). Argon is easily ionized, but has a lower thermal conductivity at high temperatures. Nitrogen has better thermal conductivity and is, therefore, added to enable the cutting of thicker material. Hydrogen has a high thermal conductivity and, therefore, should be used for improved cutting capabilities and efficiencies on thick material (over 1/2 in. [12 mm]). Helium also has a high thermal conductivity, but is seldom used because of its high cost.

  The use of nitrogen under conditions employing high arc currents can lead to the formation of relatively large amounts of nitrogen dioxide (NO_2) - a brown gas. This is highly poisonous gas, and all due precautions should be taken.

  Active gases such as carbon dioxide (CO_2) and compressed air can also be used. The use of such active gases requires torches and nozzles specifically designed for their use.

  Carbon dioxide is used in conjunction with nitrogen as the plasma gas. The carbon dioxide performs the function of an annular shielding gas.

  Compressed air is used alone as the plasma gas, and the plasma arc temperature is complemented by the

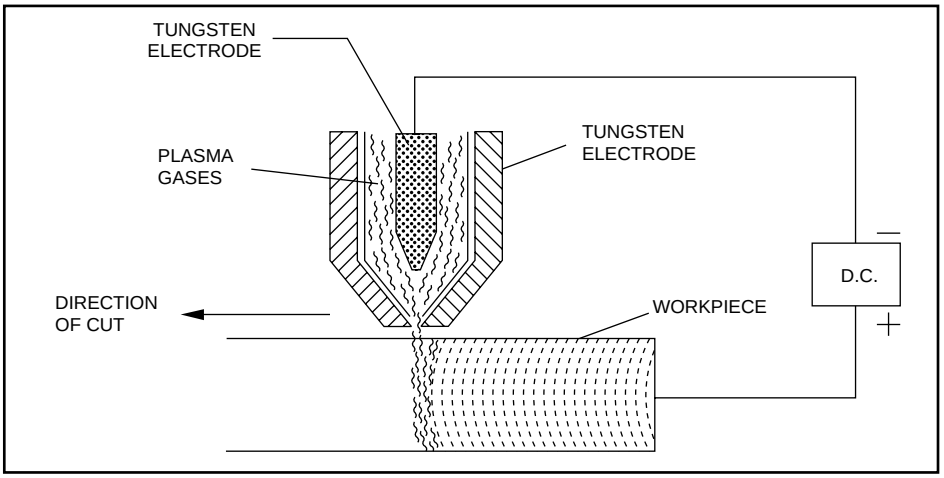

Figure 3: Schematic illustration of Plasma Arc Cutting with a Transferred Arc.

exothermic (heat generating) reaction which takes place, thus reducing the electrical energy required.

Active gases are claimed to induce change in the chemical composition of the surface layers of the cut-edge, which could effect the corrosion resistance. Cut edges should be dressed to ensure corrosion resistance equivalent to the parent material.

In general terms, the use of active gases is limited to thicknesses up to approximately $1^1/_2$ inches (30 - 40 mm), above which their cutting efficiency falls off. For greater thicknesses, the use of nitrogen/hydrogen mixed plasma gases are usually required.

- **The Size, Shape and Quality of the Cut.** The width of the kerf tends to be greater than that obtained by conventional oxy-gas cutting of carbon steels. The kerf width is affected by parameters which include: stand-off distance, electrode positioning within the nozzle, electrode shape, method of electrode dressing/grinding, nozzle size, cutting speed and thickness of material being cut.

  Further, a kerf angle is a typical feature. If process parameters are not carefully controlled this angle can increase to an unacceptable degree. The kerf angle should be less than 5°, and it can be reduced to 1°.

  The cut edge should be smooth, clean and have a very small heat-affected zone (HAZ) adjacent to the cut edge.

- **Process Parameters.** Depending on the thickness of material to be cut, the following are the main variables:

  - Arc Current (amps)
  - Plasma Gas - flow rates and mixture ratios
  - Nozzles - size, shape and design

  which affect the

  - Cutting speed and quality of cut (optimum cutting speed giving a good quality cut is less than the maximum attainable cutting speed).
  - Width and shape of cut.

In conjunction with the recommendations of the supplier of the equipment, these variables should be determined and set out as qualified procedures to ensure not only the quality of the cut, but also such factors as the economy and safety of the operation.

Important Note: In all cutting operations on stainless steels the following guidelines are helpful in maintaining corrosion resistance:

- No contamination by ferrous (iron or steel) material or particles should take place.
- Mechanically cut edges will naturally form the corrosion resistant passive film. The formation of such a passive film on cut edges will be enhanced by a chemical (acid) passivation treatment with nitric acid.
- Thermally cut edges may be affected in terms of chemical composition and metallurgical structure. Removal of affected surface layers by dressing is necessary so that impaired areas of mechanical and corrosion resistant properties are minimized.

BENDING

When any metal is bent, the metal towards the outside of the bend is in tension with the tension gradually increasing to a maximum at the outer surface. The metal towards the inside is in compression with the maximum compressive force at the inner surface. If the applied bending force is not sufficient to cause permanent plastic flow of the metal at either the outer or inner surfaces, the metal will return elastically to its original shape when the force is removed. Therefore, the force necessary to make a permanent bend will depend on: the yield strength of the material, the increase in yield strength as the metal work hardens, the desired angle of the bend, and the thickness of the material.

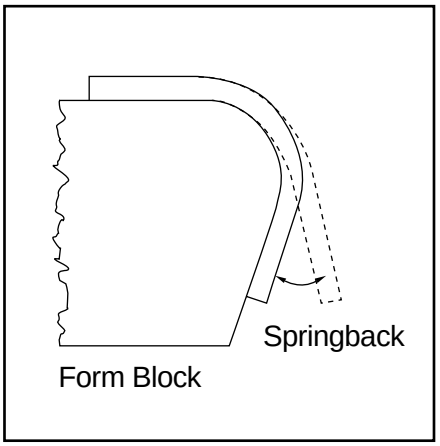

Figure 4: Schematic illustration of springback.

The austenitic stainless steels, with their higher rates of work hardening, require more power than is required to bend carbon steel of equal thickness to the same angle. Also, the bending of cold rolled tempers, such as ¼ and ½ hard and ferritic grades require more force than bends made on annealed austenitic material.

SPRINGBACK

Springback as the name applies, is the tendency of a part to return to its original shape after a bending operation has been performed on it. This occurs because not all of the strain applied during bending is plastic and, hence, permanent. The elastic portion of the strain, which is recoverable, will cause the piece to straighten somewhat when the bending force is removed, as illustrated in Figure 4.

In simple bending, the springback depends upon many factors which can be subdivided into two groups:

a. The geometrical factors, such as thickness, bend radius and bend angle and

b. The characteristics of materials, such as alloy composition and the yield strength (before and after bending). The amount of springback per degree of bend is constant regardless of the total angle of the bend. Springback increases with increasing ratio of bend radius to part thickness, that is a small bend radius results in less springback than a large radius on a part of equal thickness. Increasing yield strength also increases springback. In addition, the springback depends upon the degree to which the part conforms to the contour of the tools under load.

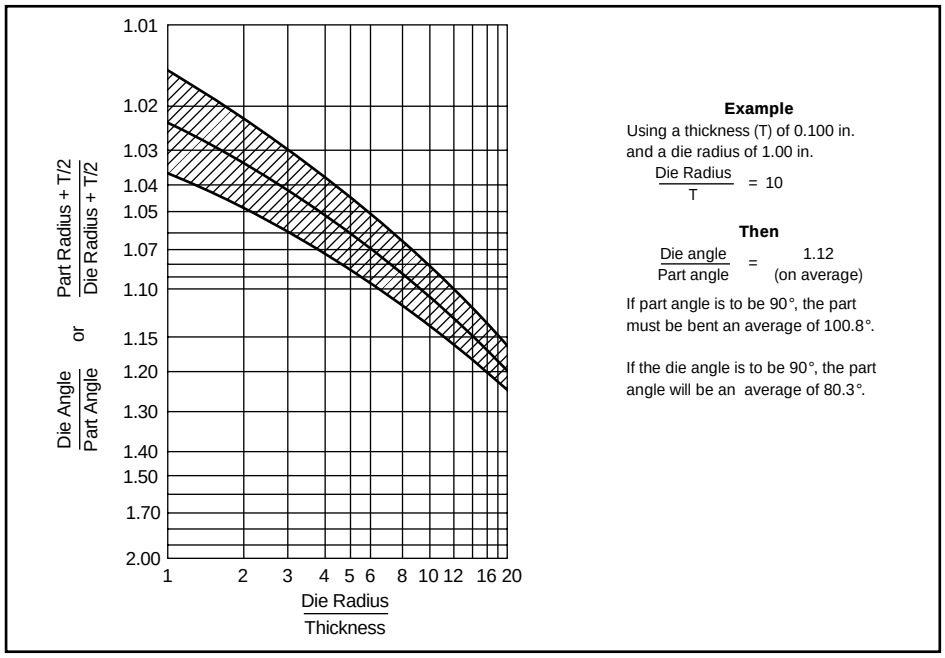

Figure 5: Relationship normally encountered between thickness of material, radius and angle of die and the radius and angle of the part in bending annealed type 300 stainless steels.

Figure 5 shows springback data which have been encountered in some commercial bending operations.

TYPES

Press Brakes

Press brake bending of austenitic stainless steels is performed in the same way as bending of carbon steel with allowances made for the higher strength and greater springback of stainless steels. The power necessary to bend annealed stainless steel is 50 to 60 percent more power than is needed for carbon steel. Cold rolled tempers will need even more because of their higher strengths.

Due to their high ductility, the annealed austenitic stainless steels can be bent to equally small bend radii, gauge for gauge, as carbon steel. However, it is a good rule in setting up brake forming procedure for one gauge of stainless steel, to assume the same forming pressures that are used for hot rolled carbon steel four gauges heavier. Cold rolled tempers and the ferritic grades require larger radii than annealed austenitic material.

On bending a part, the tool stroke should be as short as possible to lessen the tendency of stainless steels to foul or score the tools. To avoid ironing, the clearance between the die and the punch should be about 10 percent more than the metal thickness. Dies should be given a high polish, and must be free from all surface blemishes, to prevent marring the finish of the stainless steel parts.

If the brake forming process involves primarily a drawing operation, lubricants must be used.

Minimum recommended bend radii vary over rather wide limits. When bending the annealed, more ductile, austenitic grades, a minimum radius of $^1/_2$ the metal thickness is possible. For hard tempers of austenitic and ferritic grades radii up to six times the metal thickness may be required.

Exhibit 3 shows the minimum bend radii for press brake forming of annealed and cold worked tempers of austenitic stainless steel.

As with carbon steels, V-shaped female dies are frequently used. In this case the die opening is usually about eight times the inside radius of the formed part.

Roll Bending

The roll bending of flat stainless steel is performed in the same manner as with carbon steel. More power is required and there is more springback. The increased springback can be offset by increasing the roll pressure.

The most common types of roll benders are of the pyramid or pinch types. Other types of benders are also used, but in the design of tools one must remember to compensate for greater springback as compared with carbon steel.

The minimum cylinder which can be made in stainless steel on a pyramid type bender is about twice the center roll diameter as compared to about one and a half times for low carbon steel.

Roll Forming

Roll forming is roughly similar to drawbench forming, except that it is performed with driven rolls, rather than idling rolls, and is, therefore, a continuous process. It is a more economical method of shaping sections in long lengths and large quantities.

Stainless steels can be roll-formed readily in the annealed state. Extensive roll forming has been performed successfully on harder tempers, but more passes are required.

As with drawbench forming, generally the same bend radii recommendations as for other methods of bending should be followed, though bends approaching zero radius have been satisfactorily roll-formed.

High carbon or alloy steels are satisfactory roll materials. Cast aluminum bronze rolls have been used where sliding motions between roll and part are great.

Dilute solutions of water soluble oils make adequate lubricants for roll forming stainless steels. Soap solutions and extreme pressure lubricants give greater roll protection and produce a finer finish on the stainless steel. They are, however, more difficult to remove.

Exhibit 3
MINIMUM BEND RADII FOR PRESS BRAKE FORMING

Annealed Steels	
Stainless and Low-Carbon Steels	$^1/_2$ to $1^1/_2$ t
Work-Hardened Stainless Steels	
$^1/_4$ Hard	1 to 2 t
$^1/_2$ Hard	$2^1/_2$ to 4 t
Full Hard	4 to 6 t
Where t = Metal Thickness	

Stretch Forming

In free bends the material on the outside of the bend is always in tension and the metal on the inside of the bend is in compression. In stretch forming sufficient tension is applied to the material being bent, so that the compressive forces acting on the inside of the bend may be counterbalanced and leave this metal either in a neutral condition or with a small amount of tension. Of course, stretch forming increases the tension force on the outside of the bend. However, the high ductility of the annealed austenitic stainless steels make them well suited to this method of forming.

Stretch forming finds its greatest use in forming angles, channels, and hollow parts where it is effective in preventing buckling.

Commonly a tension force 10 to 20 percent above the yield strength is applied to the metal before bending is started.

Springback is greatly reduced by this method of forming because none of the deformed metal is under compressive force during bending. By proper selection of applied tension, it is sometimes possible to reduce springback to a negligible amount.

DESCALING

REMOVAL OF OXIDE SCALE

Pickling Solutions

When stainless steel has been heated to elevated temperatures, such as during annealing or welding, an oxide scale will form on the surface unless the material is completely surrounded by a protective atmosphere. Any such oxides should be removed to restore the stainless steel to its optimum corrosion resistant condition. Because they may vary in nature and composition, there is no single acid or process that will universally remove all types of oxides.

The most common pickling solution used to remove scale produced by annealing austenitic stainless steel in air is 10 to 15 percent nitric acid plus 1 to 3 percent hydrofluoric acid. The solution is usually used at temperatures of 120 to 140°F (50 to 60°C). This acid mixture efficiently removes oxides, loosely imbedded iron and chromium depleted layers, and leaves the stainless steel surface in a clean, passivated condition. For light scale the hydrofluoric acid is usually about 1 percent and for heavier scales the HF content may be increased to 2 to 3 percent.

Sulfuric acid 8 to 12 percent with 2 percent rock salt (NaCl) at 150 to 170°F (65 to 77°C) is well suited for handling ferritic or martensitic stainless steels.

When the oxide scale is heavy and tenacious the stainless steel may be treated for 5 to 10 minutes in a bath of 8 to 10 percent sulfuric acid at a temperature of 150 to 160°F (65 to 71°C). Upon removal from the bath the part should be scrubbed to remove the sludge and after rinsing, pickling can be finished in a nitric-hydrofluoric acid pickling solution.

When the above solutions cannot be used at the recommended temperature, they may be used at room temperature but it is usually necessary to strengthen the acid concentration. A cold solution takes longer to act and agitation of the part can be helpful.

Blasting

- **Grit blasting —** Grit blasting is generally unsatisfactory because grit is seldom clean, and even if it is initially, it soon becomes contaminated with abraded material. Grit blasting leaves a rough profile that makes the stainless steel prone to crevice corrosion, whether or not the surface is free of iron. Thus, grit blasting should be avoided.
- **Sand blasting —** This method is generally unsatisfactory. However, for a severely contaminated surface, sand blasting can be used as a last resort. New, clean sand will remove debris and heavy iron-contamination from the surface. But avoid using sand blasting, if possible.
- **Glass-bead blasting —** Good results have been obtained with clean, glass beads. Before applying this method, a test should be made to determine that it will remove the surface contamination. Also, periodically test to see how much reuse of the beads can be tolerated before they begin to recontaminate the surface. (Walnut shells have also performed well.)

REMOVAL OF WELD DISCOLORATION

During welding some discoloration, which is a thin oxide layer, will be evident in the heated area near the weld. Mechanical removal or this heat tint should be limited to clean glass bead blasting, flapper wheels, aluminum oxide discs and wire brushing with austenitic stainless steel wire brushes. Sand and grit blasting should be prohibited. Pickling will remove the smeared surface layer left by these mechanical cleaning operatons restoring much of the corrosion resistance lost during these mechanical cleaning operations. Electrocleaning with a hand held electrocleaning tool is an equally effective alternative to pickling for heat tint removal.

PASSIVATION

PASSIVATION OF STAINLESS STEEL

On the surface of stainless steels there is an extremely thin transparent film. Nevertheless, it is tenacious, uniform, stable and passive. It imparts to the surface the property of passivity, normally associated with noble or inert metals and it is to this passive film that stainless steels owe their superior corrosion resistance.

The film will form spontaneously, or repair itself if damaged, both in air due to the presence of oxygen, or when immersed in solutions, provided there is sufficient oxygen or oxidizing elements present. The basic passivation treatment for stainless steel is exposure of a clean surface to air. However, there is much practical evidence which shows that passivity, and therefore corrosion resistance, is enhanced if the passive film is formed by the action of oxidizing acid solutions. Nitric acid is such an oxidizing acid, and is always used for passivation treatments. Nitric acid does not corrode stainless steel, does not alter critically dimensioned parts and will not remove heat tint, embedded iron or other embedded

surface contamination. Nitric acid passivation is most useful in enhancing the corrosion resistance of freshly machined surfaces.

The standard nitric acid passivating solution is made up and used as follows:

10 to 15 percent by volume of nitric acid (HNO_3) in water. Quickest and best passivation results if used at 150°F (65°C) for the austenitic (300 series) stainless steels, and 120°F (50°C) for the ferritic and martensitic (400 series) plain chromium stainless steels. The immersion time is approximately 30 minutes, followed by thorough water washing.

It is, however, appreciated that it is not always possible to fully immerse fabrications in a hot passivating solution, and therefore, swabbing with cold acid solution is normally used where lower concentrations and temperatures of acid ease handling and application. It must be appreciated that longer contact times will be required.

For austenitic (300 series)
15% nitric acid at 65/80°F (20/25°C) .....30 to 90 minutes

For ferritics (400 series)
12% nitric acid at 65/80°F (20/25°C) .....30 to 45 minutes

The acid solution is swabbed on with sponges, soft paint brushes or fine nylon pads. Continual swabbing is necessary to ensure contact over the time period. For the treatment of small localized areas proprietary passivating pastes are obtainable and can be used. Contact time should be in accordance with suppliers' recommendations, as the concentrations may differ from paste to paste, and the lower alloyed grades will require shorter times. Thorough water rinsing MUST follow all passivating treatments.

FINISHING

GRINDING, POLISHING, AND BUFFING

Grinding, polishing, and buffing operations are applied to stainless steel in much the same manner as to other metals. The differences which exist are related to properties of stainless steel.

1. More power is required to remove metal because of its higher strength.
2. The austenitic stainless steels have lower rates of heat conductivity than carbon steel. Thus, the surfaces may become hotter than the surface of carbon steel and heat tinting of the stainless steel surface may occur.

Two variables determine the amount of grinding and polishing required, namely, the initial surface condition and the desired finish. The rougher the starting surface, the coarser is the first grinding wheel. For the first grind on welds, it is common practice to use a wheel or a belt with a grit size of 20 to 60. If the article has a surface equivalent to a 2B sheet finish, it is often customary to start with a 100 grit. Succeeding operations should make use of increasingly finer grit size until the desired smoothness is reached. For more information refer to the SSINA publication "Finishes for Stainless Steel."

CARE IN THE SHOP

HANDLING

Mechanical damage (e.g., scratches and gouges) can occur easily during handling if not guarded against. Such mechanical damage will result in the passive oxide film being "punctured" leading to a possible lower resistance to the initiation of corrosion than the surrounding chemically passivated surface. In addition, corrosion in such areas can be accelerated by the galvanic corrosion effect due to the unfavorable relative area ratios which exist.

- Plates and sheets should be stored vertically in racks and not be dragged out of the racks or over one another. Racks should be protected to prevent iron contamination.

- Heavy plates should be carefully separated and chocked with wooden blocks, in order for the forks of a fork-lift to be inserted between plates without mechanically damaging the surface. If the forks are haphazardly forced in between plates, some degree of contamination of the scratches and gouges could also occur, thus aggravating the damage so induced.

- Plates and sheets laid out for use should be off the floor and be divided by wooden planks to prevent surface damage and facilitate subsequent handling.

- Plate clamps, if used, must be used with care as the serrated faces usually dig in, indent and gouge the surface.

- If chain slings are used, these inevitably tend to slip, again causing mechanical damage of the surface. Slings of heavy duty synthetic material are preferable.

- Thin gauge cold rolled material often has a superior finish (e.g., polished or bright annealed). Clean linen gloves should be worn when handling such material to avoid finger markings. Such marks can be removed by the use of a mild organic solvent followed by cleaning with a warm detergent solution. Sometimes a warm detergent will suffice. Thorough clean water rinsing and drying completes the removal procedure.

  Note: ASTM A380 describes a number of ways fabricating shops can reduce surface contamination during fabrication.

CONTAMINATION

Contamination arises mainly from the surfaces of equipment which have previously been used in contact with carbon (mild) steel. The carbon steel and oxide scale may be smeared on and transferred to the stainless steel surface. While it is not always possible to have handling equipment dedicated for use with stainless steel, this should be done if possible (e.g., synthetic material slings).

All other handling equipment should be cleaned prior to use with stainless steel. It is, therefore, advisable to plan and schedule the handling of stainless steel, because if handling equipment is used on a random basis, this cleaning is often neglected and contamination results.

CLEANING

RUST CONTAMINATION

Sometimes the appearance of rust streaks on stainless steel leads to the belief that the stainless steel is rusting. Look for the source of the rust in some iron or steel not actually a part of the stainless steel itself. Steel (ferrous) contamination is prevented by the use of stainless steel wire brushes, and grinding with abrasives that have not been used on carbon steel.

The primary method of cleaning surfaces contaminated with embedded iron is nitric-HF pickling in 10% nitric 2% HF either warm or at ambient temperature. Pickling paste is a good alternative to immersion.

CAUTION: Do not use paint, lacquer or varnish on stainless steel for maintenance. It is much safer and easier to clean the metal periodically than to rely on any sort of protective covering.

CLEANING METHODS

Soap or detergent and water will remove ordinary deposits of grease, dirt and similar contaminations. Washing should be followed with a water rinse and thorough drying.

Tightly adhering deposits of food, oil, grease, milkstone, atmospheric stains and other light discolorations may be removed with the appropriate commercial cleaners shown in Exhibit 4.

For high luster finishes soft clothes or pads must be used without contamination from foreign dirt or grit (even from water employed to dampen) in order to avoid scratching highly reflective surfaces.

For additional information refer to the NiDI publication No. 9001 “Cleaning and Descaling Stainless Steels.” or the SSINA Designer Handbook “The Care and Cleaning of Stainless Steel.”

Exhibit 4
EFFECTIVE CLEANING METHODS

Job	Cleaning Agents*	Comments
Routine Cleaning	Warm Water, Soap, Ammonia, Detergent	Apply with sponge or cloth. Can be used on all finishes.
Fingerprints and Smears	3M Stainless Steel Cleaner and Polish, Arcal 20, Lac-O-Nu, Lumin Wash, O’Cedar Cream Polish, Stainless Shine	Provides barrier film to minimize fingerprints. Can be used on all finishes.
Stubborn Stains and Discoloration	3M Stainless Steel Cleaner and Polish, Allchem Concentrated Cleaner, Samae, Twinkle, Cameo Copper Cleaner, Grade FFF or Grade F Italian Pumice, Whiting or talc, Liquid Nu Steel, Copper’s or Revere Stainless Steel Cleaner, Household Cleaners, Lumin Cleaner, Zud Restoro, Sta-Clean, Highlite, Allen Polish, Penny-Brite, Copper-Brite	Rub lightly, using dry or damp cloth, in the direction of polish lines on the stainless steel.
Grease and Blood, Burnt-on or Baked-on Foods	Scotch-Brite Power Pad 2001, Easy-Off, De-Grease-It, 4% to 6% hot solution of such agents as tri-sodium polyphosphate, 5% to 15% caustic soda solution	Excellent removal on acids, all finishes. Particularly useful where rubbing is not practical.
Grease and Oil	Any good commercial detergent or caustic cleanser.	Apply with sponge or cloth in direction of polish lines.

*NOTE: Use of proprietary names is intended only to indicate a type of cleaner and does not constitute an endorsement. Omission of any proprietary cleanser does not imply its inadequacy. All products should be used in strict accordance with instructions on package.